MILESTONE

PARTS AND COMPONENTS

COMPANY PROFILE

Earthmoving Equipment Parts & Components

"Fast sourcing. Reliable delivery. No compromises."

www.milestoneparts.co.za

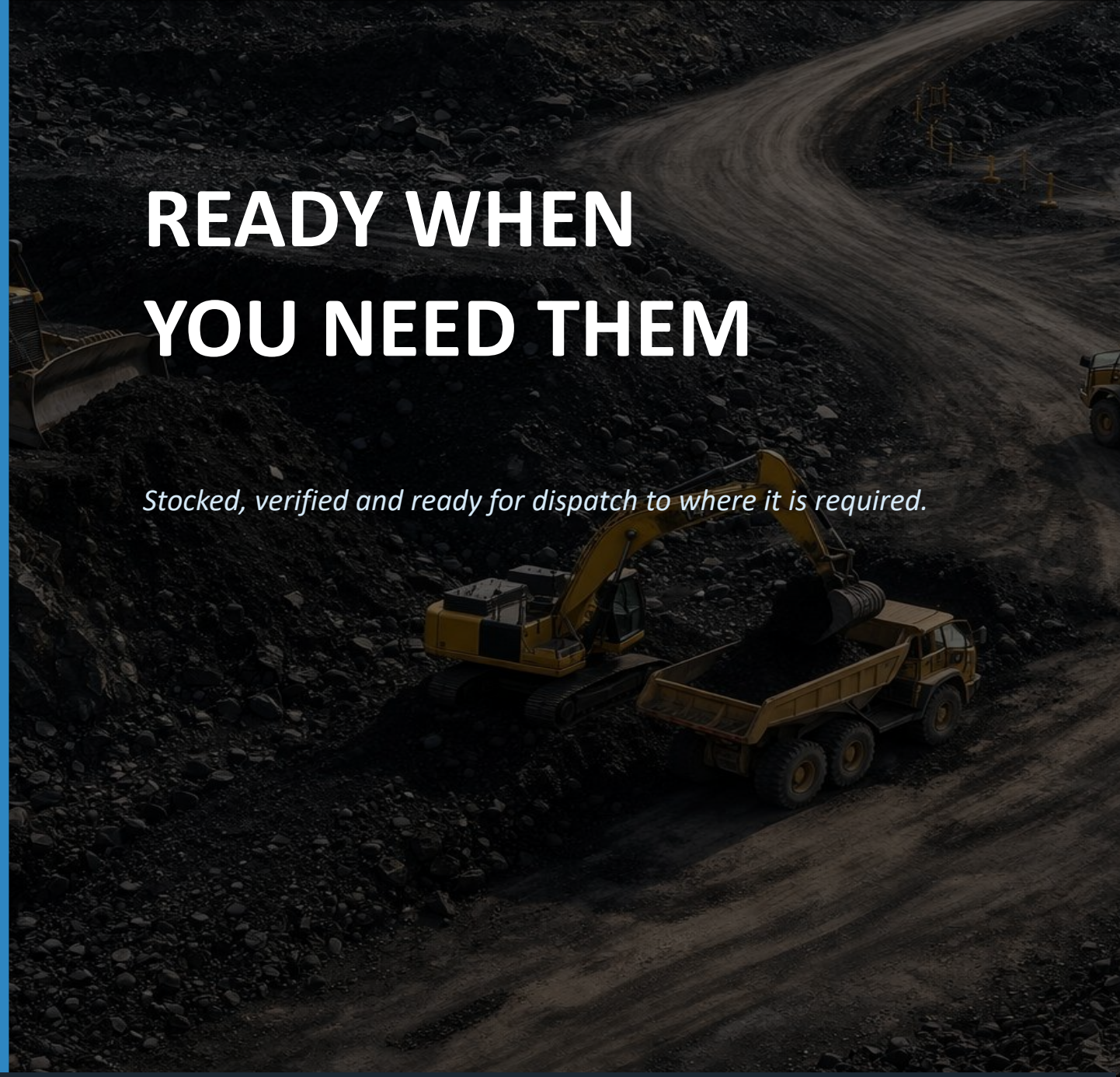

READY WHEN YOU NEED THEM

Stocked, verified and ready for dispatch to where it is required.

© 2026 Milestone Parts. All Rights Reserved. | www.milestoneparts.co.za

About Milestone

Established in 2018, Milestone addresses a critical gap in the earthmoving industry — the need for technically capable suppliers who understand equipment, not just part numbers.

Our approach combines technical expertise with real-world experience, going beyond part numbers to understand system performance, failure points, and critical specifications.

This positions us as a trusted partner to maintenance crews, procurement personnel, and operations teams—ensuring every part is fit for purpose and built to perform.

2018

ESTABLISHED

20+

YEARS EXPERIENCE

Earthmoving Equipment Parts & Components

Ready When You Need Them

20+ Years in the Field

Olido brings over 20 years of hands-on experience in equipment parts and components across Southern Africa. He works directly with clients to ensure the right parts are identified, available, and delivered fast — minimising downtime and eliminating guesswork.

- Extensive experience in the earthmoving industry
- Strong understanding of parts and components within systems
- Fully grasp the real cost of machine downtime
- Direct, hands-on involvement in daily operations
- Deep technical foundation and problem-solving mindset

Olido Vergari

FOUNDER — MILESTONE PARTS

"Fast Quotations. Reliable delivery. No compromises."

WHAT WE DO & WHY CHOOSE MILESTONE

What We Do

Milestone Parts supplies both individual parts and major components for earthmoving equipment across mining, construction, and plant operations.

We source fast-moving parts from stock and slow-moving parts efficiently through our established supplier network — flexible solutions based on each client's specific requirements.

Our approach: understand the requirement fully before supplying a solution. We never push products based on availability.

Construction · Mining · Agriculture

Why Choose Milestone

01

Parts That Arrive Fast

Stocked, verified, ready for dispatch. Minimise costly downtime.

02

Right Part — First Time

Exact specs identified upfront. No delays, no returns.

03

Fast Response

Replies and quotes quickly. WhatsApp, call or email.

04

Built for Harsh Conditions

Quality selected for demanding conditions

05

Technical Expertise

20+ years hands-on. Solution-based approach always.

06

Competitive Pricing

Best price without compromising quality or reliability.

COMPONENTS

Major mechanical assemblies for earthmoving equipment — stocked and available

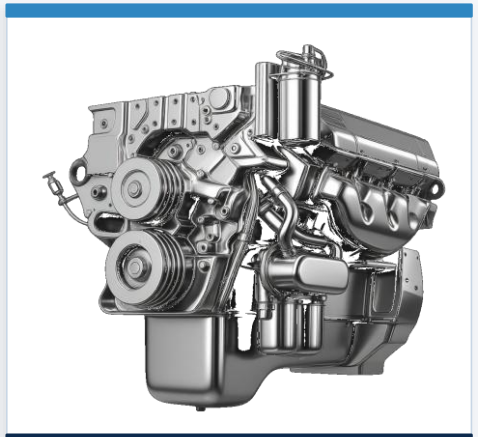

Engines

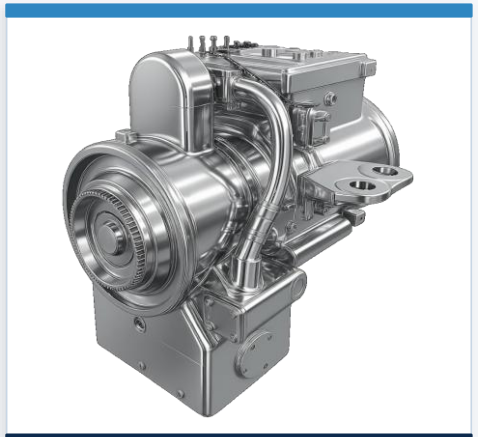

Transmissions

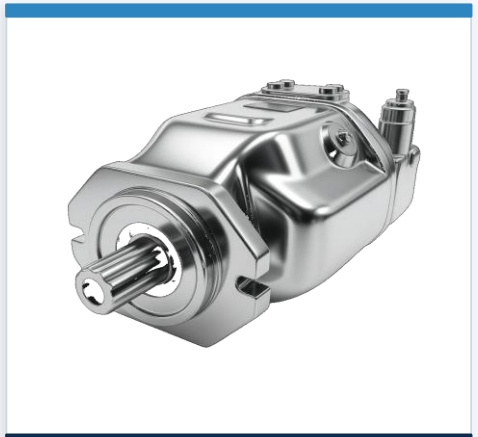

Hydraulic Motors

Final Drives

Cylinders

Turbochargers

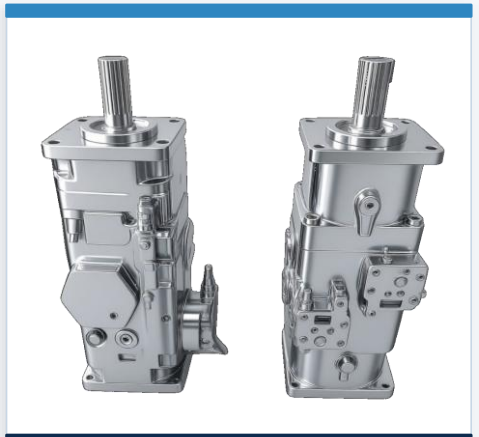

Hydraulic Pumps

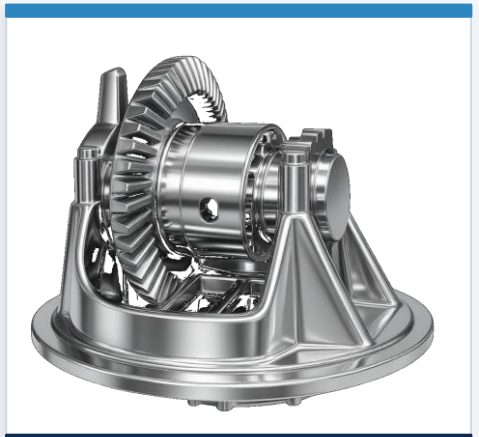

Differentials

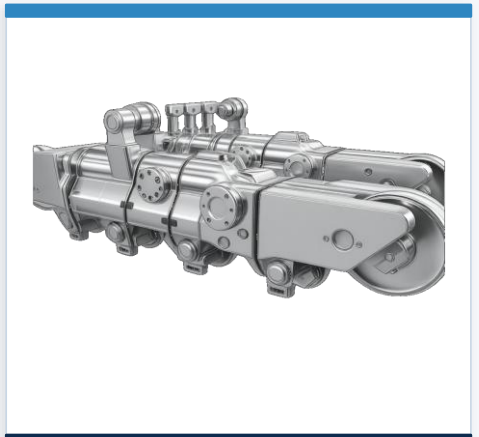

Track Frames

PARTS

Individual replacement parts — fast-moving items in stock, slow-moving parts sourced efficiently

Engine Parts

Cooling System

Drive Train

Electrical

Frame & Body

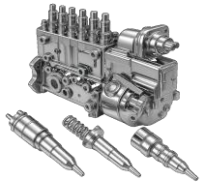

Fuel System

Hardware

Hydraulic System

Implements / GET

Operator Station

Pins & Bushes

Seal & Gasket Kits

Service Equipment

Steering & Brake

Undercarriage

INDUSTRIES WE SERVE

Milestone Parts serves clients across three core industries where equipment reliability is critical and downtime is costly.

CONSTRUCTION

Reliable parts for construction fleets, including dozers, excavators, graders, and loaders, on civil and infrastructure projects.

MINING

Parts and components for open-pit and underground mining equipment. Speed of supply is critical — we are stocked and ready.

AGRICULTURE

Parts supply for agricultural equipment operators requiring technical know-how, fast turnaround, and dependable sourcing.

HOW IT WORKS — SIMPLE PROCESS

Getting parts should not be complicated. At Milestone, it never is.

1

SEND YOUR REQUEST

Send us your part enquiry via WhatsApp, call or email — takes less than a minute.

2

WE CONFIRM AVAILABILITY

We quickly identify the exact part and confirm availability — no delays, no guesswork.

3

GET YOUR QUOTE

Receive a clear, competitive quote fast. The right answer, no overload of options.

4

FAST DELIVERY

Your parts are dispatched quickly to keep your operations running. No unnecessary delays.

Understand First. Supply Second.

Our focus is simple — understand the requirement properly before supplying a solution. We never push products based on availability or convenience.

Every enquiry is approached with the intention of identifying the correct part or component for the application, ensuring compatibility, performance, and long-term reliability.

This reduces unnecessary downtime, avoids incorrect supply, and builds long-term working relationships with our clients.

Looking Ahead	Milestone Parts continues to grow its presence within the earthmoving industry, building strong client relationships and expanding supply capabilities to meet market demand.

WHY WORK WITH US

- Strong technical background across earthmoving equipment
- Practical, solution-based approach to every enquiry
- Competitive pricing without compromising quality
- Experience across mining, construction, and plant operations
- Clear and direct communication
- Fast response times — no unnecessary layers
- Established supplier network for hard-to-find parts

OUR COMMITMENT

We Tell It Straight

No overselling. No pushing slow stock. We understand what you actually need before we supply anything.

Speed Is a Given

Downtime costs money. We respond fast, quote fast, and dispatch fast. Every time, without exception.

Quality Without Compromise

Every part is carefully selected. We don't supply what we wouldn't stand behind with our own name.

Built on Relationships

We build long-term client partnerships based on honest advice, consistent delivery, trust, and mutual growth.

You Deal With the Decision-Maker

No layers. No call centres. Direct access to the person who knows the product and makes it happen.

Always Deliver

Results count. We make it happen and exceed expectations — because tomorrow must be planned for today.

MILESTONE
PARTS AND COMPONENTS

WHATSAPP	DIRECT CONTACT	PHYSICAL ADDRESS
+27 79 589 8218	+27 79 589 8218	30 All Black Rd,
	+27 10 900 3315	Anderbolt, Boksburg,
	info@msparts.co.za	Johannesburg, 1459

Scan to WhatsApp

www.milestoneparts.co.za

"Fast sourcing. Reliable delivery. No compromises."

© 2026 Milestone Parts. All Rights Reserved. | Earthmoving Equipment Parts and Components